AUTOMATIC GAS VALVES Fast Opening / Fast Closing
1 ¼”, 1 ½” and 2” – Pmax 360 mbar

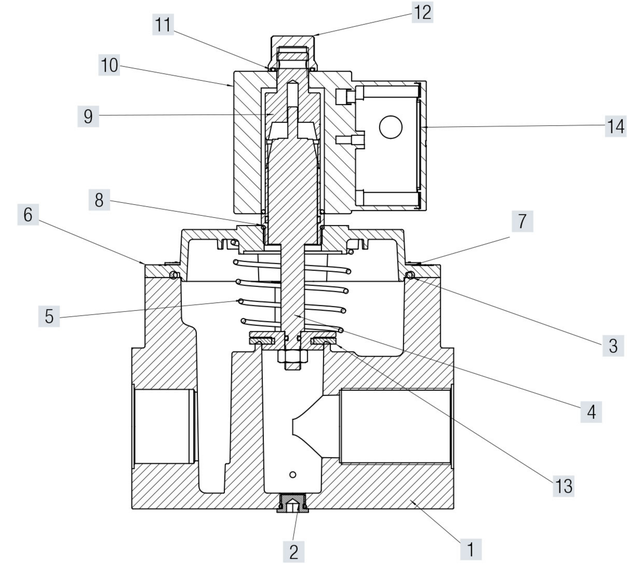

Code	Description	Dimension	Pmax
AV032FO	Gas valve fast opening	1 ¼”	360 mbar
AV040FO	Gas valve fast opening	1 ½”	360 mbar
AV050FO	Gas valve fast opening	2”	360 mbar
AVD32FO	Gas valve fast opening	DN32	360 mbar
AVD40FO	Gas valve fast opening	DN40	360 mbar
AVD50FO	Gas valve fast opening	DN50	360 mbar
AV032FO-FR	Gas valve fast opening Flow regulation	1 ¼”	360 mbar
AV040FO-FR	Gas valve fast opening Flow regulation	1 ½”	360 mbar
AV050FO-FR	Gas valve fast opening Flow regulation	2”	360 mbar
AVD32FO-FR	Gas valve fast opening Flow regulation	DN32	360 mbar
AVD40FO-FR	Gas valve fast opening Flow regulation	DN40	360 mbar
AVD50FO-FR	Gas valve fast opening Flow regulation	DN50	360 mbar
CPI-2	Control position indicator		

TECHNICAL FEATURES	
Pmax	360 mbar
Inlet connection -outlet	Thread gas 1 ¼”, 1 ½” and 2” - ISO 228 DN32 DN40 DN50 - Sliding Aluminium flange PN10
Opening time **Closing time**	<1 second <1 second
Max number of operations	20 per minute
Incorporated AISI 303 steel mesh filter on request	
Supply voltage	230V (-15%+10%) 50-60Hz 110V (-15%+10%) 50-60Hz 24Vdc (-15%+10%) 50-60Hz
Power	230Vac1 1/4"-11/2"-PeakPower40W- Maintain power4W 2"-Peakpower130W- Maintain power 1,5W Coils to class F copper wire class H
Use	Non – aggressive gases – Family 1 – 2 – 3 and air
Test point	5 connections Screw ¼” NPT
Working Temperature	- 20 °C – 60 °C
Approval	EN161
Protection degree	IP65

Materials:

Complete Body	Die – Cast Aluminium Gd – AlSi12Cu - EN AB 46100

1	Body	**8**	O-Ring
2	Screw Plugs	**9**	Pilot
3	O-Ring	**10**	Coil
4	Plunger	**11**	O-Ring
5	Spring	**12**	Locking Ring
6	Cover	**13**	Gasket
7	Screw	**14**	Connector

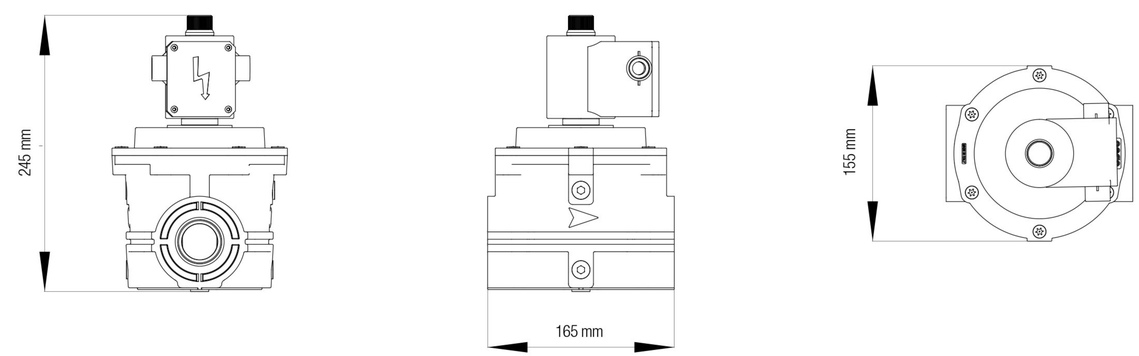

Dimension	1 ¼”	1 ½”	2 ”
WEIGHT (kgs)	4,2	4,2	4,6